ご使用者　山中亮司(東洋物産工業（株）)　JSA Webdesk No.915007401 / Downloaded:2025-05-21
利用者1名に使用権を許諾します。2 台以上のコンピュータでの共同利用，LAN その他ネットワークでの利用，公衆が使用するコンピュータへのインストールは禁止されております。「利用規約」に従ってご使用ください。

JAPANESE
INDUSTRIAL
STANDARD

Translated and Published by
Japanese Standards Association

JIS T 8131 : 2015

(JSAA/JSA)

Industrial safety helmets

ICS 13.340.20

Reference number : JIS T 8131 : 2015 (E)

PROTECTED BY COPYRIGHT

ご使用者　山中亮司(東洋物産工業（株）)　JSA Webdesk No.915007401 / Downloaded:2025-05-21
利用者1名に使用権を許諾します。2 台以上のコンピュータでの共同利用，LAN その他ネットワークでの利用，公衆が使用するコンピュータへのインストールは禁止されております。「利用規約」に従ってご使用ください。

Date of Establishment: 1977-12-01
Date of Revision: 2015-10-26
Date of Public Notice in Official Gazette: 2015-10-26
Investigated by: Japanese Industrial Standards Committee
Standards Board for ISO area
Technical Committee on Safety

JIS T 8131:2015, Second English edition published in 2018-04

Translated and published by: Japanese Standards Association
Mita MT Building, 3-13-12, Mita, Minato-ku, Tokyo, 108-0073 JAPAN

In the event of any doubts arising as to the contents,
the original JIS is to be the final authority.

© JSA 2018
All rights reserved. Unless otherwise specified, no part of this publication may be reproduced or utilized in any form or by any means, electronic or mechanical, including photocopying and microfilm, without permission in writing from the publisher.

Printed in Japan

KK/AT

PROTECTED BY COPYRIGHT

ご使用者　山中亮司(東洋物産工業（株）)　JSA Webdesk No.915007401 / Downloaded:2025-05-21
利用者1名に使用権を許諾します。2 台以上のコンピュータでの共同利用，LAN その他ネットワークでの利用，公衆が
使用するコンピュータへのインストールは禁止されております。「利用規約」に従ってご使用ください。

Contents

Page

Introduction 1

1 Scope 1

2 Normative reference 1

3 Terms and definitions 1

3A Classification 3

4 Construction 4
4.1 General construction 4
4.2 Materials 4
4.3 Shell 4
4.4 Design and finish 4
4.5 Wearing height 4
4.6 Internal vertical distance 4
4.7 Horizontal distance 4
4.8 Chin strap 4
4.9 Ventilation 4

5 Performance requirements 5
5.1 Mandatory requirements 5
5.2 Optional requirements 5

6 Tests 6
6.1 Sample 6
6.2 Conditioning of test samples 7
6.3 Headforms 7
6.4 Measurement of wearing height, internal vertical distance and horizontal distance 9
6.5 Shock absorption test 9
6.6 Penetration test 12
6.7 Lateral rigidity test (optional requirement) 15
6.8 Flammability test (optional requirement) 16
6.9 Withstand voltage test (optional requirement) 17

7 Marking 18
7.1 Marking on safety helmet 18
7.2 Additional information 19

Annex JA (informative) Recommended method of construction of wooden headforms and ventilation holes in safety helmets 20

PROTECTED BY COPYRIGHT

ご使用者　山中亮司(東洋物産工業（株）)　JSA Webdesk No.915007401 / Downloaded:2025-05-21
利用者1名に使用権を許諾します。2 台以上のコンピュータでの共同利用，LAN その他ネットワークでの利用，公衆が
使用するコンピュータへのインストールは禁止されております。「利用規約」に従ってご使用ください。

Annex JB (informative)　Comparison table between JIS and corresponding International Standard ····· 21

PROTECTED BY COPYRIGHT

ご使用者　山中亮司(東洋物産工業（株）)　JSA Webdesk No.915007401 / Downloaded:2025-05-21
利用者1名に使用権を許諾します。2 台以上のコンピュータでの共同利用，LAN その他ネットワークでの利用，公衆が
使用するコンピュータへのインストールは禁止されております。「利用規約」に従ってご使用ください。

Foreword

This translation has been made based on the original Japanese Industrial Standard revised by the Minister of Health, Labour and Welfare and the Minister of Economy, Trade and Industry, through deliberations at the Japanese Industrial Standards Committee as the result of proposal for revision of Japanese Industrial Standard submitted by Japan Safety Appliances Association (JSAA)/Japanese Standards Association (JSA) with the draft being attached, based on the provision of Article 12 Clause 1 of the Industrial Standardization Law applicable to the case of revision by the provision of Article 14. Consequently **JIS T 8131**:2000 is replaced with this Standard.

This **JIS** document is protected by the Copyright Law.

Attention is drawn to the possibility that some parts of this Standard may conflict with patent rights, applications for a patent after opening to the public or utility model rights. The relevant Ministers and the Japanese Industrial Standards Committee are not responsible for identifying any of such patent rights, applications for a patent after opening to the public or utility model rights.

PROTECTED BY COPYRIGHT

ご使用者　山中亮司(東洋物産工業（株）)　JSA Webdesk No.915007401 / Downloaded:2025-05-21
利用者1名に使用権を許諾します。2 台以上のコンピュータでの共同利用，LAN その他ネットワークでの利用，公衆が
使用するコンピュータへのインストールは禁止されております。「利用規約」に従ってご使用ください。

Industrial safety helmets

Introduction

This Japanese Industrial Standard has been prepared based on the first edition of **ISO 3873** published in 1977, but by making some modifications to update its technical contents to suit the current situation in Japan regarding safety, etc. and to establish consistency with "Standard of Safety Helmet" stipulated by the Minister of Health, Labour and Welfare.

The portions with continuous sidelines or dotted underlines are the matters in which the contents of the corresponding International Standard have been modified. A list of modifications with the explanations is given in Annex JB.

1 Scope

This Standard specifies the physical properties and performance requirements, the related test methods and marking requirement for the industrial safety helmets (hereafter referred to as "safety helmets") intended for protection of head against flying or dropping objects, tumbling and falling down.

NOTE : The International Standard corresponding to this Standard and the symbol of degree of correspondence are as follows.

ISO 3873:1977 *Industrial safety helmets* (MOD)

In addition, symbols which denote the degree of correspondence in the contents between the relevant International Standard and **JIS** are IDT (identical), MOD (modified), and NEQ (not equivalent) according to **ISO/IEC Guide 21-1**.

2 Normative reference

The following standard contains provisions which, through reference in this text, constitute provisions of this Standard. The most recent edition of the standard (including amendments) indicated below shall be applied.

ISO 6487 *Road vehicles—Measurement techniques in impact tests—Instrumentation*

3 Terms and definitions

For the purpose of this Standard, the following terms and definitions apply.

3.1 industrial safety helmet

a working helmet primarily intended to protect the wearer's head against injury (see Figure 1)

3.2 shell

the material which covers the wearer's head and provides the general form of the helmet

PROTECTED BY COPYRIGHT

ご使用者　山中亮司(東洋物産工業（株）)　JSA Webdesk No.915007401 / Downloaded:2025-05-21
利用者1名に使用権を許諾します。2 台以上のコンピュータでの共同利用，LAN その他ネットワークでの利用，公衆が
使用するコンピュータへのインストールは禁止されております。「利用規約」に従ってご使用ください。

3.3 peak

an extension of the shell above the eyes, that can be either integrated with the shell or detachable from it

3.4 brim

the rim surrounding the lower part of the shell making its permanent extension

3.5 harness

the complete assembly to be fitted inside the helmet by means of which the helmet is maintained in position on the head, and which may provide a means of absorbing kinetic energy transmitted to the wearer's head during an impact

It consists for example of the items given in the following:

a) **head band** the part of the harness surrounding the head at the base of the skull;

b) **cradle** the parts of the harness in contact with the head, excluding the head band.

3.6 protective padding

material contributing to the absorption of kinetic energy during an impact

In the protective padding, the anti-concussion liner is included.

NOTE : The anti-concussion liner is the other material than the harness which is inserted in the inner part of the shell for the purpose of absorbing the kinetic energy transmitted to the wearer's head during an impact.

3.7 ventilation holes

holes provided in the shell to permit circulation of air inside the helmet

3.8 helmet accessories

any additional parts for special purposes such as neck protection device, attachment devices for cap lamp and cable, face protection device and hearing sense protection device

3.9 wearing height

vertical distance from the lower edge of the head band to the highest point of the headform when the safety helmet is mounted on the headform

3.10 internal vertical distance

vertical clearance between the top of the headform and the inside of the shell

3.11 horizontal distance

horizontal clearance between the head band and the inside of the shell or any protruding part on the inside of the shell

3.12 chin strap

part consisting of strap and ear strap for fastening under the chin in order to prevent the helmet from falling down from the wearer's head

It may include nape strap.

PROTECTED BY COPYRIGHT

ご使用者　山中亮司(東洋物産工業（株）)　JSA Webdesk No.915007401 / Downloaded:2025-05-21
利用者1名に使用権を許諾します。2 台以上のコンピュータでの共同利用，LAN その他ネットワークでの利用，公衆が
使用するコンピュータへのインストールは禁止されております。「利用規約」に従ってご使用ください。

NOTE : A nape strap is the fixed or adjustable assembly to be applied to the back of the head for securing against falling and shaking.

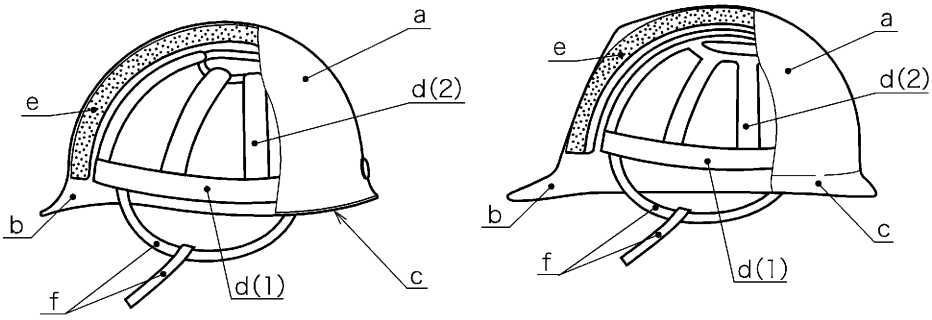

Symbol	Name	
a	Shell	
b	Peak	
c	Brim	
d	Harness	(1) Head band
		(2) Cradle
e	Protective padding	
f	Chin strap	

Figure 1　Safety helmet

3A　Classification

The safety helmets are classified according to the main use as shown in Table 1. Optional performance requirements are given in Table 2.

Table 1　Classification

Type	Main use	Applicable clause
For flying and falling objects	Used for protection of head in places or works with a risk of head injury from penetration of flying or falling objects, such as scaffolds, and harbour loading or unloading.	**5.1.1 a**) **5.1.2 a**)
For protection against tumbling and falling down	Used for protection of head from head injury from tumbling or falling in works performed at high places.	**5.1.1 b**) **5.1.2 b**)

Table 2　Classification according to optional requirements

Classification	Applicable clause
Ultra-low temperature	**5.2.1**
Lateral rigidity	**5.2.2**
Flame resistance	**5.2.3**
Withstand voltage	**5.2.4**

PROTECTED BY COPYRIGHT

ご使用者　山中亮司(東洋物産工業（株）)　JSA Webdesk No.915007401 / Downloaded:2025-05-21
利用者1名に使用権を許諾します。2 台以上のコンピュータでの共同利用，LAN その他ネットワークでの利用，公衆が使用するコンピュータへのインストールは禁止されております。「利用規約」に従ってご使用ください。

4 Construction

4.1 General construction

a) **For flying and falling objects** The safety helmet shall be provided at least with shell, harness and chin strap.

b) **For protection against tumbling and falling down** The safety helmet shall be provided at least with shell, harness, chin strap and protective padding.

4.2 Materials

The parts to be in contact with the skin shall not be made of material which stimulates the skin or which is likely to give harmful influence to the health.

4.3 Shell

The shell shall have as uniform strength as possible and shall not be specially reinforced at any point. This does not exclude a gradual increase in shell thickness or ribs or means for attaching the harness but does exclude other highly localized reinforcement.

4.4 Design and finish

Sharp corner, rough surface or projection likely to injure the wearer shall not be on any part of the safety helmet touched or considered to be touched by the wearer when wearing the helmet. The adjusting method to be built in the safety helmet shall be designed and produced in such a way that the wearer does not adjust erroneously under the expected using condition.

4.5 Wearing height

When measured under the condition stated in **6.4**, the wearing height shall be not less than 85 mm.

4.6 Internal vertical distance

When measured under the condition stated in **6.4**, the internal vertical distance shall be not less than 25 mm.

4.7 Horizontal distance

When measured under the condition stated in **6.4**, the horizontal distance at the front and side of the safety helmet shall be not less than 5 mm.

4.8 Chin strap

The chin strap shall be attached to the shell or harness. In addition, the chin strap shall not be of the width less than 10 mm when not stretched and be capable of surely fastening so as to be free from falling down or shaking during the use of the helmet. The helmet may be provided with a nape strap for preventing falling and shaking.

4.9 Ventilation

The holes for ventilation, if provided on the shell, shall be not larger than 450 mm^2 in total area. For the design of ventilation holes, see Annex JA.

PROTECTED BY COPYRIGHT

ご使用者　山中亮司(東洋物産工業（株）)　JSA Webdesk No.915007401 / Downloaded:2025-05-21
利用者1名に使用権を許諾します。2 台以上のコンピュータでの共同利用，LAN その他ネットワークでの利用，公衆が
使用するコンピュータへのインストールは禁止されております。「利用規約」に従ってご使用ください。

The ventilation holes may be provided with the means of sealing if necessary. Shells for which the withstand voltage is selected out of optional requirements shall not have such ventilation holes.

5 Performance requirements

5.1 Mandatory requirements

5.1.1 Shock absorption

The shock absorption requirement shall be either of the followings.

a) **For flying and falling objects** When the safety helmet is tested by the method specified in **6.5**, the impact force transmitted to the headform shall not be more than 4.9 kN.

b) **For protection against tumbling and falling down** When the safety helmet is tested by the method specified in **6.5**, the impact force transmitted to the headform and its duration shall conform to the following requirements.

1) The impact force transmitted to the headform is not more than 9.8 kN.

2) The impact force of 7.35 kN or stronger does not continue for 3 ms or longer.

3) The impact force of 4.90 kN or stronger does not continue for 4.5 ms or longer.

5.1.2 Penetration resistance

The penetration resistance requirement shall be either of the followings.

a) **For flying and falling objects** When the safety helmet is tested by the method specified in **6.6**, the point of the conical striker shall not contact the surface of the headform.

b) **For protection against tumbling and falling down** When the safety helmet is tested by the method specified in **6.6**, the vertical distance from the upper end of the apex ring of the test jig to the lowest descending point of the concave on the inside of the shell (if the tip of the conical striker penetrates the shell, to the tip of the striker) shall be less than 15 mm.

5.2 Optional requirements

5.2.0 General

Characteristics given in **5.2.1** to **5.2.4** may be selected according to the demand upon agreement between the parties concerned. Safety helmets found to comply with the optional requirements given in **5.2.1** to **5.2.4** shall bear a marking to that effect by means such as embossing, stamping or labelling according to **7.1.2**.

5.2.1 Ultra-low temperature

When tested for shock absorption by the method specified in **6.5** after being conditioned in accordance with **6.2.7**, the safety helmet shall meet the requirements of **5.1.1**. Further, when tested for penetration resistance by the method specified in **6.6**, it shall meet the requirements of **5.1.2**.

PROTECTED BY COPYRIGHT

ご使用者　山中亮司(東洋物産工業（株）)　JSA Webdesk No.915007401 / Downloaded:2025-05-21
利用者1名に使用権を許諾します。2 台以上のコンピュータでの共同利用，LAN その他ネットワークでの利用，公衆が
使用するコンピュータへのインストールは禁止されております。「利用規約」に従ってご使用ください。

5.2.2 Lateral rigidity

When the safety helmet is tested by the method specified in **6.7**, the maximum lateral deformation of the helmet at 430 N shall not exceed 40 mm with regard to the lateral deformation at the initial compression 30 N and the residual deformation at 30 N at second time shall not exceed 15 mm.

5.2.3 Flammability

When the safety helmet is tested by the method specified in **6.8**, the material of the shell shall not keep burning with the emission of flame for longer than 5 s after removal of the flame.

5.2.4 Withstand voltage

When the safety helmet is tested by the method specified in **6.9**, the shell immersed in water shall withstand a voltage of 20 kV for 1 min and, if the power source frequency is 60 Hz, the leakage current shall not be more than 10 mA.

If the power source frequency is 50 Hz, the measured leakage current is converted to the value at 60 Hz by the following formula.

$$I_{60} = \frac{I_{50}}{50} \times 60$$

where, I_{60} : leakage current at 60 Hz (mA)

I_{50} : leakage current at 50 Hz (mA)

This requisite is for securing the protection against the voltage up to 7 kV in the maximum service voltage.

6 Tests

6.1 Sample

Helmets shall be submitted for testing in the condition in which they are offered for sale, including any manufacturer-designed holes in the shell, and other means of attachment of any accessories for special purposes.

6.1.1 Minimum number of samples required for mandatory tests

The minimum number of samples required for mandatory tests shall be as follows.

a) 1 helmet for shock absorption test after low temperature conditioning given in **6.2.4**.

b) 1 helmet for shock absorption test after high temperature conditioning given in **6.2.5**.

c) 1 helmet for shock absorption test after immersion given in **6.2.6**.

d) 1 helmet for penetration test after low temperature conditioning given in **6.2.4**.

e) 1 helmet for penetration test after high temperature conditioning given in **6.2.5**.

6.1.2 Minimum number of samples required for optional tests

The minimum number of samples required for optional tests shall be as follows.

PROTECTED BY COPYRIGHT

ご使用者　山中亮司(東洋物産工業（株）)　JSA Webdesk No.915007401 / Downloaded:2025-05-21
利用者1名に使用権を許諾します。2 台以上のコンピュータでの共同利用，LAN その他ネットワークでの利用，公衆が
使用するコンピュータへのインストールは禁止されております。「利用規約」に従ってご使用ください。

a) 1 helmet for shock absorption test and 1 helmet for the penetration test after ultra-low temperature conditioning (either at −20 °C or at −30 °C) given in **6.2.7**, namely 2 helmets in total.

b) 1 helmet for lateral rigidity test

c) 1 helmet for flame resistance test

d) 1 helmet for withstand voltage test

6.2 Conditioning of test samples

6.2.1 Temperature conditioning

Cabinets for high temperature conditioning and low temperature conditioning shall be sufficiently large to ensure that the helmets can be positioned so that they do not touch one another and shall be capable of adjusting the temperature to +50 °C ± 2 °C or −10 °C ± 2 °C, respectively. For testing helmets for which a ultra-low temperature performance specified in **5.2.1** is specified as an optional requirement, a cabinet used shall be capable of adjusting to −20 °C ± 2 °C or −30 °C ± 2 °C.

6.2.2 Conditioning of samples

The samples shall be stored at least for 24 h in the test room before starting the test.

6.2.3 Test atmosphere

The safety helmets shall be tested in an atmosphere of a temperature of 22 °C ± 5 °C, and a relative humidity of (55 ± 30) %.

6.2.4 Low temperature

The safety helmets shall be exposed for at least 4 h to the temperature of −10 °C ± 2 °C.

6.2.5 High temperature

The safety helmets shall be exposed for at least 4 h to the temperature of +50 °C ± 2 °C.

6.2.6 Immersion

The safety helmets shall be immersed in water for at least 4 h to the temperature of +25 °C ± 5 °C.

6.2.7 Ultra-low temperature

The safety helmet for which ultra-low temperature performance is demanded shall be exposed to the atmosphere of −20 °C ± 2 °C or −30 °C ± 2 °C for at least 4 h.

6.3 Headforms

6.3.1 Construction

Headforms used in the tests shall be made of hardwood (see Annex JA).

The profile and dimensions of the headform shall be as defined in Figure 2 and Table 3.

PROTECTED BY COPYRIGHT

ご使用者　山中亮司(東洋物産工業（株）)　JSA Webdesk No.915007401 / Downloaded:2025-05-21
利用者1名に使用権を許諾します。2 台以上のコンピュータでの共同利用，LAN その他ネットワークでの利用，公衆が使用するコンピュータへのインストールは禁止されております。「利用規約」に従ってご使用ください。

Unit: mm

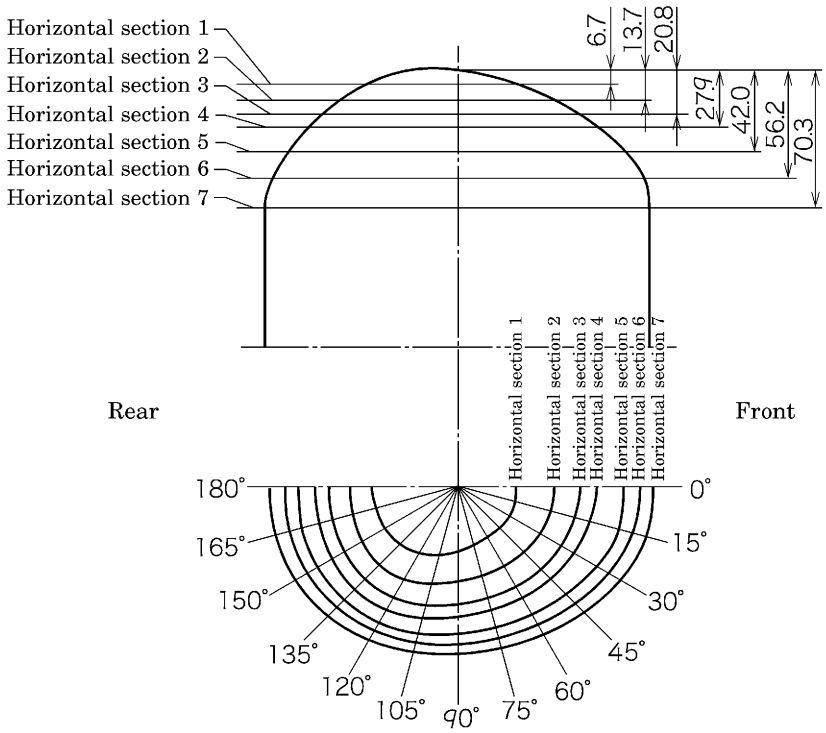

Figure 2　Headform elevations

Table 3　Headform dimension table (polar coordinates of horizontal sections)

Unit: mm

Angle	Horizontal section No.						
	1	2	3	4	5	6	7
0°	28.3	46.0	58.9	68.4	81.4	89.9	94.3
15°	28.9	47.0	59.1	67.6	82.1	89.8	94.7
30°	29.2	47.2	59.3	66.6	79.5	87.0	92.0
45°	29.4	46.5	58.0	63.0	75.9	82.0	85.9
60°	30.1	45.7	57.0	61.3	73.0	77.9	82.4
75°	31.2	45.7	56.8	61.5	71.9	75.9	80.4
90°	33.1	46.9	57.3	63.1	73.7	77.5	81.2
105°	35.8	50.3	61.0	67.0	77.0	81.2	84.0
120°	39.5	55.2	66.3	72.4	80.9	84.9	88.3
135°	43.0	58.5	68.9	75.4	84.3	87.8	91.1
150°	45.0	58.9	69.1	76.1	84.2	89.4	93.5
165°	45.0	58.0	67.8	74.8	83.0	89.0	93.4
180°	44.5	57.9	67.1	73.6	82.8	89.1	94.3

PROTECTED BY COPYRIGHT

ご使用者　山中亮司(東洋物産工業（株）)　JSA Webdesk No.915007401 / Downloaded:2025-05-21
利用者1名に使用権を許諾します。2 台以上のコンピュータでの共同利用，LAN その他ネットワークでの利用，公衆が
使用するコンピュータへのインストールは禁止されております。「利用規約」に従ってご使用ください。

6.4 Measurement of wearing height, internal vertical distance and horizontal distance

The wearing height, internal vertical distance and horizontal distance shall be measured with the helmet mounted in the wearing position on the appropriate headform in a state of applying a force of 50 N ± 1 N in the direction perpendicular to the headform from the upper part of the helmet.

a) **Wearing height** On a headform on which a safety helmet is mounted, the vertical distance from the lower end of the head band to the highest point of the headform measured at the front middle point between both sides of the head or at the side surface middle point between the front head and back head, whichever is the larger.

b) **Internal vertical distance** The distance obtained by subtracting dimension B from dimension A defined in the following, dimension A and dimension B being the height of the shell outer surface measured with the helmet mounted on the headform (see Figure 3).

1) The height with the cradle fitted (dimension A)

2) The height when removing the cradle and the protective padding, if the helmet has one (dimension B)

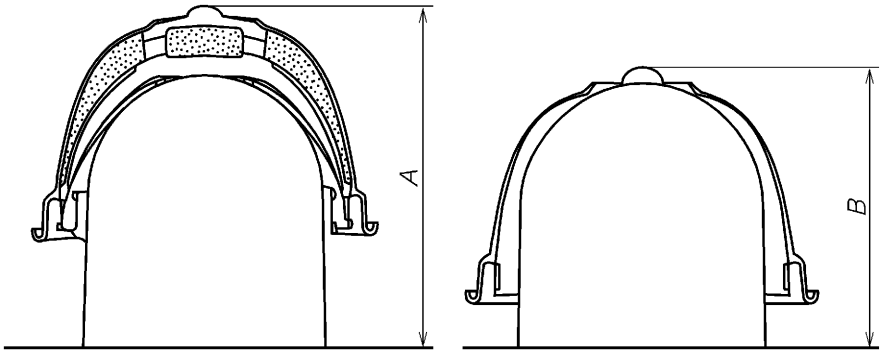

Figure 3 Measurement of internal vertical distance

c) **Horizontal distance** The clearance between the inside of the shell and the surface of the headform which is measured at the lower edge of the head band, with the safety helmet mounted on the headform, at the front middle point between right and left and at the side surface middle point between the front head and back head.

6.5 Shock absorption test

6.5.1 Principle

Shock absorption is measured by the direct measurement of the force transmitted and its duration to a rigidly mounted helmeted headform.

6.5.2 Apparatus

The base of the apparatus shall be monolithic and sufficiently large to offer full resistance to the effect of the blow. It shall have a mass of at least 500 kg and shall be suitably installed to obviate the return compression wave. The headform shall be rigidly

PROTECTED BY COPYRIGHT

ご使用者　山中亮司(東洋物産工業（株）)　JSA Webdesk No.915007401 / Downloaded:2025-05-21
利用者1名に使用権を許諾します。2 台以上のコンピュータでの共同利用，LAN その他ネットワークでの利用，公衆が使用するコンピュータへのインストールは禁止されております。「利用規約」に従ってご使用ください。

mounted so that the striking point is positioned vertically on the force transducer. The force transducer (load cell) shall be able to endure a force up to 40 kN (see Figure 4 and Figure 5). The force transducer shall have a frequency response performance meeting the frequency class (CFC) 600 specified in **ISO 6487**.

Apparatus used for each purpose of test shall be as follows.

a) **For safety helmets for flying and falling objects** A striker having a mass of $5.0^{+0.1}_{0}$ kg and a hemispherical striking face of 48 mm radius shall be positioned above the headform so that its axis is coaxial with the centre vertical axis of the headform and so that it may be dropped freely or in guided fall. When selecting guided fall, the retardation due to the guide shall be minimized. The impact force shall be measured by a non-inertial force transducer firmly attached to the base. The force transducer shall be positioned so that its vertical axis is coaxial with the centre vertical axis of the headform, on which the safety helmet shall be mounted for testing (see Figure 5).

b) **For safety helmets for protection against tumbling and falling down** A striker having a mass of $5.0^{+0.1}_{0}$ kg and a whole circular striking face of 63.5 mm radius shall be positioned above the headform so that its axis is coaxial with the vertical axis of the headform and so that it may be dropped freely or in guided fall. When selecting guided fall, the retardation due to the guide shall be minimized.

The lower part of the headform shall be partially cut off and fixed in such a way that the headform centre line is inclined either towards the front head part or the back head part at an angle of 30° to the horizontal, and that the front head part can be struck for the front head test and the back head part for the back head test, with the striking point coaxial with the vertical axis of the force transducer (Figure 6). The test shall be carried out by mounting the safety helmet on this inclined headform.

PROTECTED BY COPYRIGHT

ご使用者　山中亮司(東洋物産工業（株）)　JSA Webdesk No.915007401 / Downloaded:2025-05-21
利用者1名に使用権を許諾します。2 台以上のコンピュータでの共同利用，LAN その他ネットワークでの利用，公衆が
使用するコンピュータへのインストールは禁止されております。「利用規約」に従ってご使用ください。

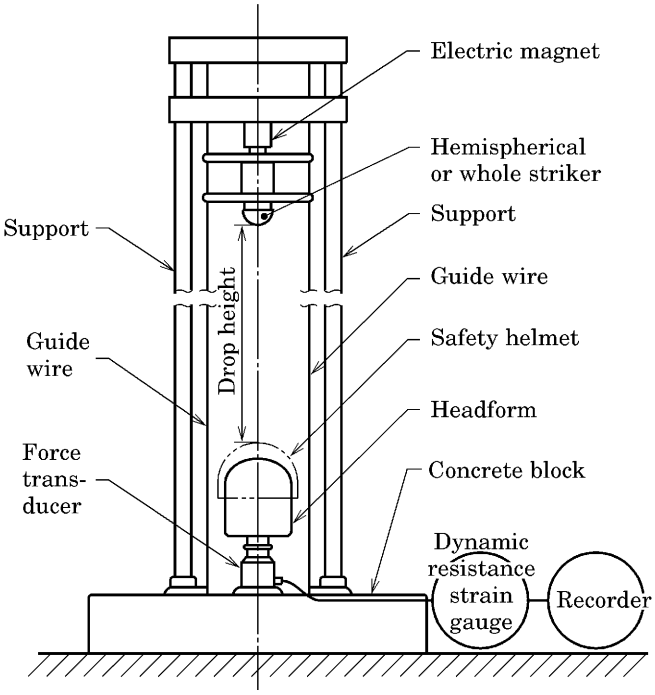

Figure 4　Example of shock absorption tester

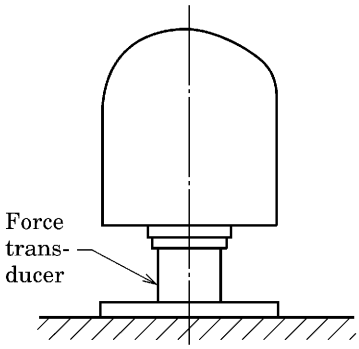

Figure 5　Example of headform and force transducer for testing helmets for flying and falling objects

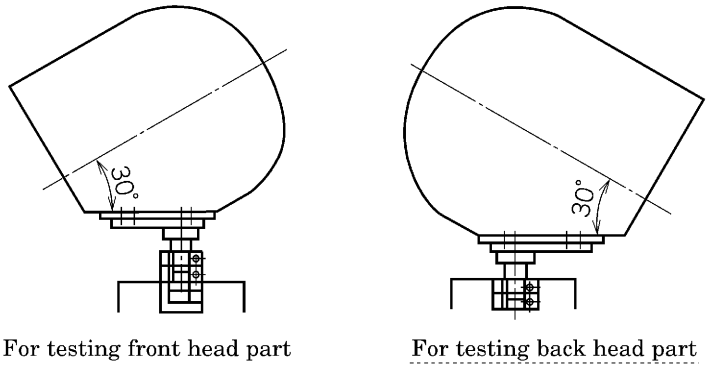

Figure 6　Headform and force transducer for testing helmets for protection against tumbling and falling down

6.5.3　Test procedure

Each of the requisite samples specified in **6.1** shall be adjusted so as to be of the wearing height as high as possible and conditioned appropriately in accordance with **6.2**.

Those subjected to temperature conditioning shall be tested according to the following so that the test completes within 1 min of completion of the temperature conditioning, and those subjected to immersion conditioning shall be tested in a wet state.

a)　The helmet shall be mounted in the same way as actually put on the head in a state that the clearance between the head band and the headform is so kept as not to touch each other.

PROTECTED BY COPYRIGHT

ご使用者　山中亮司(東洋物産工業（株）)　JSA Webdesk No.915007401 / Downloaded:2025-05-21
利用者1名に使用権を許諾します。2 台以上のコンピュータでの共同利用，LAN その他ネットワークでの利用，公衆が
使用するコンピュータへのインストールは禁止されております。「利用規約」に従ってご使用ください。

b) The striker shall be allowed to fall on the safety helmet from a height of 1 000 ± 5 mm measured between the striking point of the helmet and the lower end of the hemispherical or whole striker.

c) For testing helmets for protection against tumbling and falling down, the helmet shall be mounted on the headform in such a way that the whole striker does not touch the brim.

d) The measurement shall be made by recording the impulse waveform transmitted to the headform.

6.6 Penetration test

6.6.1 Principle

a) **For safety helmets for flying and falling objects** By allowing a conical striker to fall on a safety helmet securely worn on a headform, the observation shall be made whether the striker touches the headform or whether there is a visible scar on the contactable surface of the headform.

b) **For safety helmets for protection against tumbling and falling down** The vertical distance from the upper end of the apex ring of the test jig to the lowest descending point of the concave on the inside of the shell (if the tip of the conical striker penetrates the shell, to the tip of the striker) shall be measured.

6.6.2 Apparatus

a) **For safety helmets for flying and falling objects** The base of the apparatus shall be monolithic and sufficiently large to offer full resistance to the effect of the blow.

A headform shall be securely mounted in a vertical position on the base surface.

The surface of the headform that the conical striker contacts shall be, for example, of pressure sensitive film capable of directly detecting the contact of the striker and of a material that can be restored after contact, if necessary for next contact (see Figure 7 and Figure 8).

The conical striker shall have the following characteristics (see Figure 9).

- Mass: $3.0^{+0.05}_{0}$ kg
- Angle of point: 60 ± 0.5°
- Radius of point: 0.5 ± 0.1 mm
- Height of cone: approx. 40 mm
- Hardness of tip: 45 HRC min.

The conical striker shall be positioned above the headform with its axis of the conical striker coaxial with the vertical axis of the headform so that the striker can be allowed to fall in either free fall or guided fall.

When selecting guided fall, the retardation due to the guide shall be minimized.

PROTECTED BY COPYRIGHT

ご使用者　山中亮司(東洋物産工業（株）)　JSA Webdesk No.915007401 / Downloaded:2025-05-21
利用者1名に使用権を許諾します。2 台以上のコンピュータでの共同利用，LAN その他ネットワークでの利用，公衆が
使用するコンピュータへのインストールは禁止されております。「利用規約」に従ってご使用ください。

Unit: mm

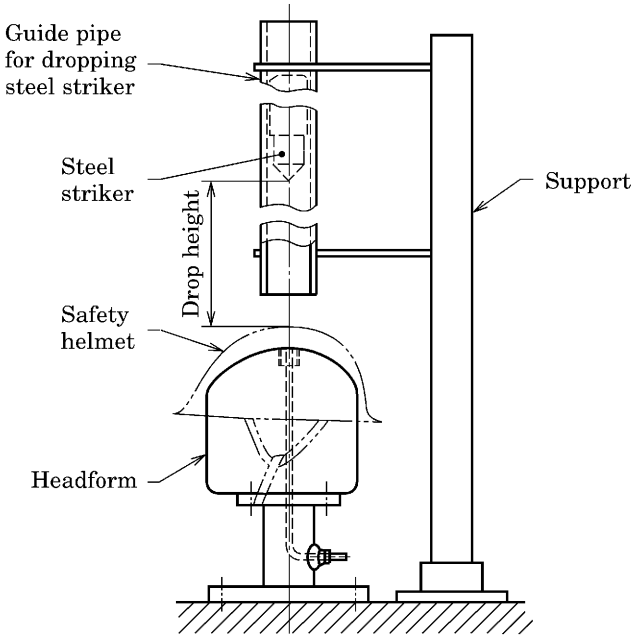

Figure 7　Penetration resistance tester

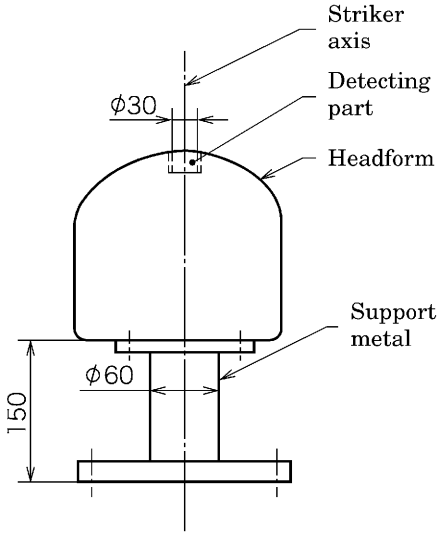

Figure 8　Headform for penetration test

Unit: mm

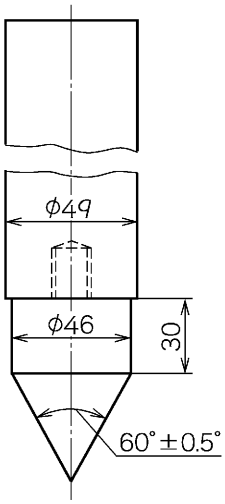

Figure 9　Striker for penetration test

b) **For safety helmets for tumbling and falling down**　In the testing apparatus (Figure 10), a test jig with the apex ring shall be set at the headform (15 mm in thickness of the ring) (Figure 11). The concave part of the centre of the test jig shall be filled with oil clay up to the surface and when the conical striker is dropped, the apparatus shall be such that the vertical distance of 15 mm or more specified in **5.1.2** can be confirmed.

If required, the surface of the oil clay shall be restored.

The conical striker shall have the following characteristics (see Figure 12).

PROTECTED BY COPYRIGHT

ご使用者　山中亮司(東洋物産工業（株）)　JSA Webdesk No.915007401 / Downloaded:2025-05-21
利用者1名に使用権を許諾します。2 台以上のコンピュータでの共同利用，LAN その他ネットワークでの利用，公衆が使用するコンピュータへのインストールは禁止されております。「利用規約」に従ってご使用ください。

- Mass: $1.8^{+0.03}_{0}$ kg
- Angle of point: $60 \pm 0.5°$
- Radius of point: 0.5 ± 0.1 mm
- Height of cone: approx. 20 mm
- Hardness of tip: 45 HRC min.

Unit: mm

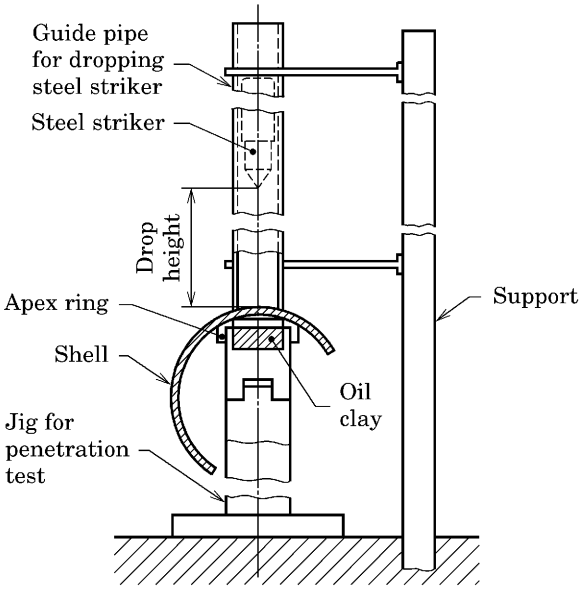

Figure 10　Penetration resistance tester

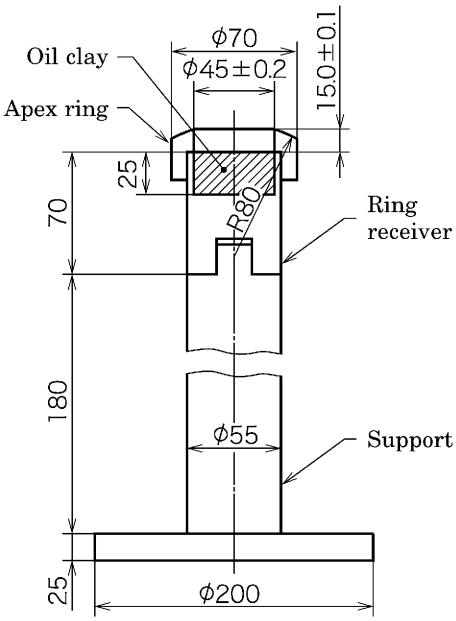

Figure 11　Jig for penetration test

Unit: mm

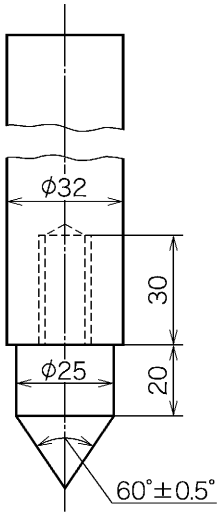

Figure 12　Striker for penetration test

6.6.3　Test procedure

The test procedure shall be as follows.

PROTECTED BY COPYRIGHT

ご使用者　山中亮司(東洋物産工業（株）)　JSA Webdesk No.915007401 / Downloaded:2025-05-21
利用者1名に使用権を許諾します。2 台以上のコンピュータでの共同利用，LAN その他ネットワークでの利用，公衆が
使用するコンピュータへのインストールは禁止されております。「利用規約」に従ってご使用ください。

a) **For safety helmets for flying and falling objects** Each of the requisite samples specified in **6.1** shall be conditioned appropriately in accordance with **6.2**, and then tested according to the following. Samples subjected to temperature conditioning shall be tested so that the test completes within 1 min of completion of the temperature conditioning.

1) The sample shall be placed on the headform in such a manner that the head band is loose around the headform.

2) The conical striker shall be allowed to fall on the safety helmet from such a height that the distance between the striking point of the safety helmet and the point of the conical striker is 1 000 ± 5 mm.

The striking point shall be within a circular area of 50 mm radius of which the centre is at the crown of the helmet and the helmet may be inclined, if necessary, on the headform.

Note is taken of whether or not contact is made between the conical striker and the headform or there is a visible scar on the contactable surface of the headform. If necessary, the material contacting the surface of the headform shall be restored prior to a subsequent test.

b) **For safety helmets for protection against tumbling and falling down** The shell shall be put on the apex ring of the test jig so that the conical striker drops on the points on the front, back and both sides of the shell. The striker shall be dropped from such a height that the distance between the striking point on the shell and the tip of the striker is 600 ± 3 mm and it shall be examined whether or not the vertical distance between the lowest descending point of the concave on the inside of the shell or the tip of the striker and the indentation produced by the impact caused by the contact with the oil clay shall be measured (see Figure 13).

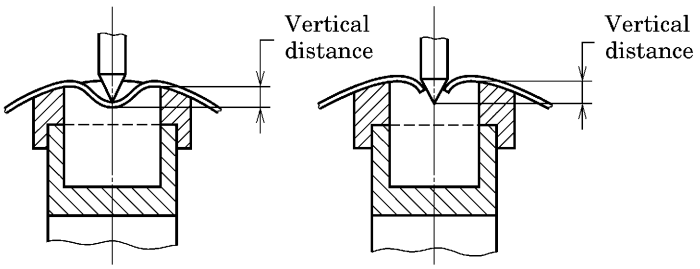

Figure 13 Measuring method of penetration resistance for safety helmets for protection against tumbling and falling down

6.7 Lateral rigidity test (optional requirement)

6.7.1 Principle

Lateral compression is applied to a safety helmet and its deformation is measured.

6.7.2 Apparatus

The apparatus used shall be provided with two rigid parallel plates measuring 300 mm × 250 mm having the guide with the lower edges of which are rounded to a radius of 10 ± 0.5 mm, and shall be capable of applying a side pressure of 430 N or more with accelerating speed adjusting function.

PROTECTED BY COPYRIGHT

ご使用者　山中亮司(東洋物産工業（株）)　JSA Webdesk No.915007401 / Downloaded:2025-05-21
利用者1名に使用権を許諾します。2 台以上のコンピュータでの共同利用，LAN その他ネットワークでの利用，公衆が
使用するコンピュータへのインストールは禁止されております。「利用規約」に従ってご使用ください。

6.7.3 Procedure

The safety helmet shall be placed between the two flat parallel plates in the test apparatus. The brim shall lie outside of the lower ends of the parallel plates but the parallel plates shall be put as close as possible so as to contact the shell. If the helmet has no brim, it shall be placed so that its lower end contacts the parallel plates. An initial force of 30 N shall be applied to the plates at right angles, so that the helmet is subjected to a lateral pressure. After 30 s the distance between parallel plates (dimension X) shall be measured (see Figure 14). The force shall then be increased at the rate of 100 N per minute up to 430 N, maintained for 30 s, and the distance between the plates (dimension Y) shall be measured. The force shall be reduced to 25 N, and then immediately increased again up to 30 N, and maintained for 30 s. The distance between the plates (dimension Z) shall be measured.

Measurements shall be made to the nearest millimetre and the extent of damage, if any, shall be noted.

The maximum side deformation shall be obtained by subtracting dimension Y from dimension X, and residual side deformation, subtracting dimension Z from dimension X.

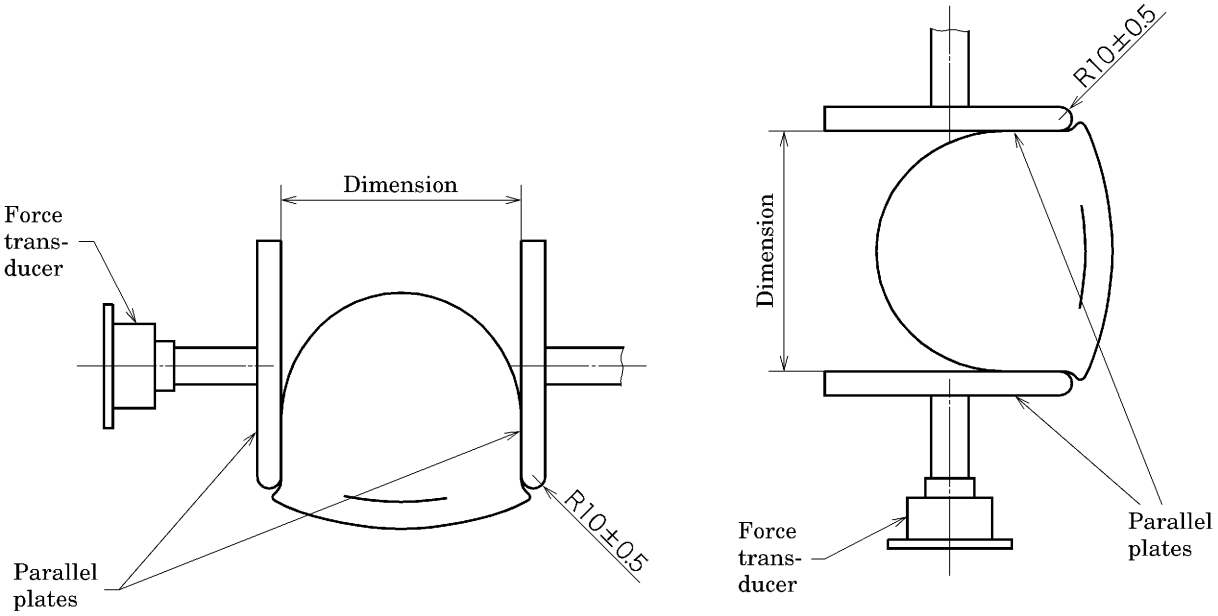

Figure 14 Lateral rigidity test

6.8 Flammability test (optional requirement)

6.8.1 Principle

A shell is exposed to a specified flame and the state of combustion is observed.

6.8.2 Apparatus

A Bunsen burner with a 10^{+2}_{0} mm diameter bore suitable for propane gas and capable of adjusting a rate of gas flow and air vent shall be used. The gas used shall be propane having a minimum purity of 95 %.

PROTECTED BY COPYRIGHT

ご使用者　山中亮司(東洋物産工業（株）)　JSA Webdesk No.915007401 / Downloaded:2025-05-21
利用者1名に使用権を許諾します。2 台以上のコンピュータでの共同利用，LAN その他ネットワークでの利用，公衆が
使用するコンピュータへのインストールは禁止されております。「利用規約」に従ってご使用ください。

6.8.3 Test procedure

The flame shall be adjusted so that the blue cone is clearly defined, although slightly turbulent, and the blue flame is approximately 15 mm long.

With the burner angled 45° to the vertical, and the safety helmet upside down, the shell shall be held so that the plane tangential to the test point (where the end of the flame is applied), which is between 50 mm and 100 mm from the crown of the shell surface when measured by means of a compass or the like, is horizontal. The tip of the inner blue flame shall be applied to the test point, and after 10 s, removed. The shell shall be examined for flaming (see Figure 15). The test point shall be any suitable point between 50 mm and 100 mm from the crown.

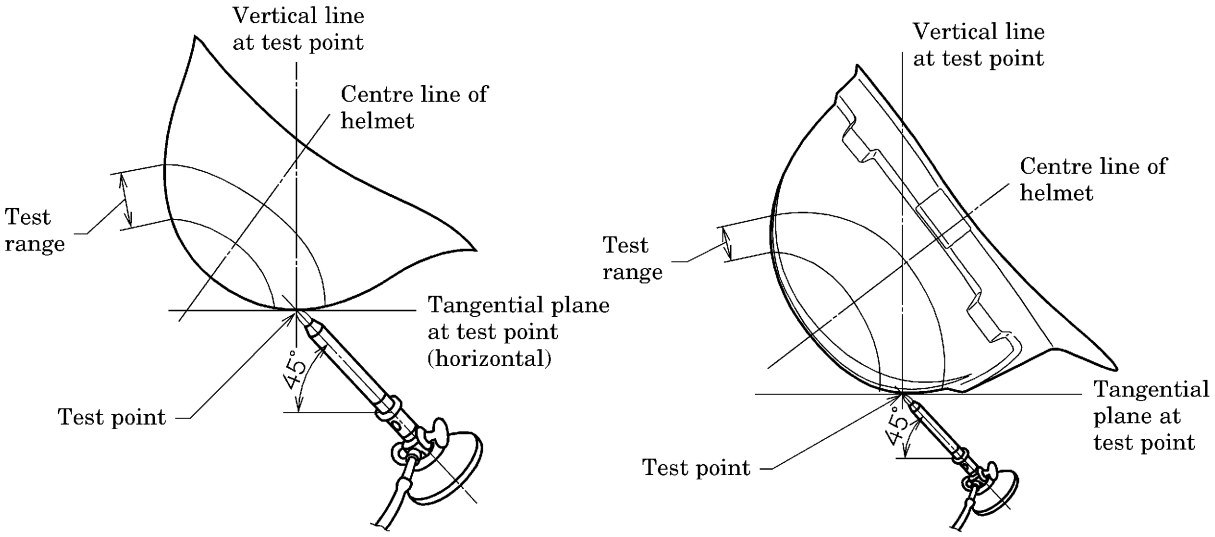

Figure 15 Flammability test

6.9 Withstand voltage test (optional requirement)

6.9.1 Principle

A specified voltage is applied to a single shell to see whether the shell endures that voltage, and to measure the leakage current value.

6.9.2 Apparatus

The withstand voltage testing machine shall have a vessel that accommodates one or more shells, and shall be capable of outputting and measuring the voltage of 20 kV or more and measuring the leakage current of 10 mA or more.

6.9.3 Test procedure

The test procedure shall be as follows.

a) The shell of the safety helmet, i.e. with all other parts such as harness removed, shall be placed in the vessel, and both the shell and the vessel shall be filled with water up to the same level.

b) The minimum distance from the water level in the shell to the brim, if the shell has brim around its whole circumference, and to the rim, if the shell is without brim, shall be 30 mm.

PROTECTED BY COPYRIGHT

ご使用者　山中亮司(東洋物産工業（株）)　JSA Webdesk No.915007401 / Downloaded:2025-05-21
利用者1名に使用権を許諾します。2 台以上のコンピュータでの共同利用，LAN その他ネットワークでの利用，公衆が
使用するコンピュータへのインストールは禁止されております。「利用規約」に従ってご使用ください。

c) With the shell under the above condition, electrodes shall be immersed in the inside and outside of the shell, respectively, and a voltage of 20 kV near the sinusoidal wave of 50 Hz or 60 Hz shall be applied.

d) Voltage shall be raised appropriately up to 75 % of the specified voltage and when 75 % has been reached, raised at the rate of about 1 kV per second. When 20 kV has been reached, it shall be examined whether the shell withstands this voltage for 1 min.

e) Further, the leakage current when applying the voltage of 20 kV shall be measured. In the measurement of leakage current, an effective value indicating type ammeter shall be used by being connected usually to the grounding side (see Figure 16).

Unit: mm

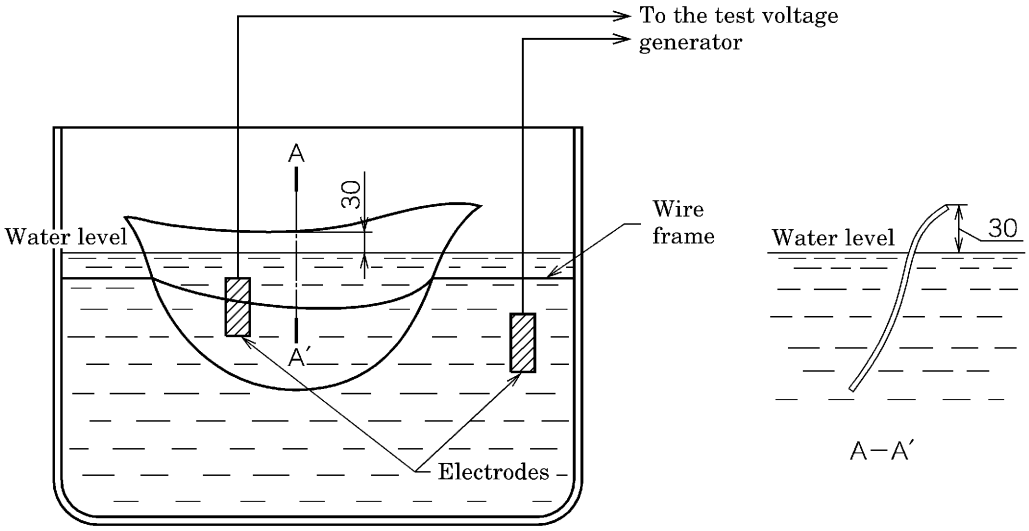

Figure 16　Withstand voltage test vessel and setting of shell

7 Marking

7.1 Marking on safety helmet

7.1.1 Every safety helmet claimed to comply with the requirements of this Standard shall be marked visibly and durably by means of embossing, stamping or labelling with the following information.

a) Title and/or number of this Standard

b) Manufacturer's name or its abbreviation

c) Year and month of manufacture or their abbreviation

d) Type of safety helmet (manufacturer's designation)

e) Marking of the type of helmet (see Table 4)

On helmets for protection against tumbling and falling down which also satisfy the requirements for helmets for flying and falling objects, the marking of both types shall be given.

PROTECTED BY COPYRIGHT

ご使用者　山中亮司(東洋物産工業（株）)　JSA Webdesk No.915007401 / Downloaded:2025-05-21
利用者1名に使用権を許諾します。2 台以上のコンピュータでの共同利用，LAN その他ネットワークでの利用，公衆が
使用するコンピュータへのインストールは禁止されております。「利用規約」に従ってご使用ください。

Table 4　Marking of the type of helmet

Type	Marking
For flying and falling objects	“For flying and falling objects”
For protection against tumbling and falling down	“For protection against tumbling and falling down”

7.1.2 Every safety helmet claimed to comply with the optional requirement(s) demanded by the user shall be marked durably and indelibly by means of embossing, stamping or labelling with the matter(s) shown in Table 5 that are relevant to the optional requirement(s) selected.

Table 5　Marking related to optional requirements

Optional requirement	Marking
Ultra-low temperature	−20 °C or −30 °C
Lateral rigidity	Lateral rigidity or LD
Flame resistance	That the helmet is flame resistant.
Withstand voltage	That the helmet has withstand voltage performance (7 kV or under in service voltage). That the helmet has passed the withstand voltage test (20 kV 10 mA).
NOTE: LD stands for lateral deforming.	

7.2　Additional information

7.2.1 An instruction manual including the following use instructions, explained in a clear and concise manner, shall be attached to the safety helmet.

a) For adequate protection, this helmet must fit or be adjusted by the head band to the size of the user’s head.

b) This helmet is made to absorb the energy of a blow by partial destruction or damage to the shell and the harness, and even though such damage may not be readily apparent, any helmet subjected to severe impact should be replaced.

c) Unless recommended by the manufacturer, the helmet should not be modified.

d) Unless approved by the manufacturer, organic solvent or the like should not be used.

e) Method of removing the internal package for replacement.

PROTECTED BY COPYRIGHT

ご使用者　山中亮司(東洋物産工業（株）)　JSA Webdesk No.915007401 / Downloaded:2025-05-21
利用者1名に使用権を許諾します。2 台以上のコンピュータでの共同利用，LAN その他ネットワークでの利用，公衆が使用するコンピュータへのインストールは禁止されております。「利用規約」に従ってご使用ください。

Annex JA (informative)
Recommended method of construction of wooden headforms and ventilation holes in safety helmets

JA.1 Recommended method of construction of wooden headforms

Each headform is built up from layers of hardwood (generally, kinds of oak, Japanese oak, or sawtooth oak). Above the reference line, the layers are planed to thicknesses to match the datum levels and are cut to outlines plotted from the dimensions given in Figure 2, the grain being displaced by 90° from layer to layer. Below the reference line the same procedure is recommended but the layer thicknesses and profile are optional to suit the method of mounting the helmet. The layers are glued and screwed together. Accurate assembly is facilitated by marking transverse and longitudinal axes on each piece and by drilling a small diameter hole through the centre. The assembled headform is held in a press until the glue has hardened, when the final shaping may be undertaken. The headform should be sealed with several coats of shellac polish.

JA.2 Structure of ventilation holes

Ventilation holes, if provided in the helmet, should be such that fresh air comes in from under the helmet circumference, and if the air goes out the holes provided on the top one-third of the shell, maximum ventilation performance should be ensured.

PROTECTED BY COPYRIGHT

ご使用者　山中亮司(東洋物産工業（株）)　JSA Webdesk No.9150074 01 / Downloaded:2025-05-21
利用者1名に使用権を許諾します。2台以上のコンピュータでの共同利用，LANその他ネットワークでの利用，公衆が
使用するコンピュータへのインストールは禁止されております。「利用規約」に従ってご使用ください。

Annex JB (informative)
Comparison table between JIS and corresponding International Standard

JIS T 8131:2015 *Industrial safety helmets*					**ISO 3873**:1977 *Industrial safety helmets*		
(I) Requirements in **JIS**		(II) International Standard number	(III) Requirements in International Standard		(IV) Classification and details of technical deviation between **JIS** and the International Standard by clause		(V) Justification for the technical deviation and future measures
No. and title of clause	Content		No. of clause	Content	Classification by clause	Detail of technical deviation	
1 Scope	This Standard specifies industrial safety helmets.		1, 2	Almost identical with **JIS**.	Alteration	Integrate clauses **1** and **2** of **ISO**.	Editorial modification to replace the old style used in **ISO**. Revision proposal will be planned for the occasion of **ISO** review.
3 Terms and definitions	3.12 Definition of chin strap		3	—	Addition	Add definition of chin strap.	Adoption of **EN 397**:2012 instead of **ISO**, whose contents are old and out of line with the current situation. Addition of a term and definition, which constitutes no technical deviation.
3A Classification	Classification according to usage		—	—	Addition	Add classification according to usage and that according to optional performance requirements.	Addition of classification adhering to the norm of **JIS** standard structure, which constitutes no technical deviation.
4 Construction	4.1 General construction		4.2	General construction	Addition	Add specification for chin strap.	In Japan, the chin strap is an essential component in safety helmets. Revision proposal will be planned for the occasion of **ISO** review.
	4.8 Chin strap		—	—			

PROTECTED BY COPYRIGHT

ご使用者　山中亮司(東洋物産工業（株）)　JSA Webdesk No.915007401 / Downloaded:2025-05-21
利用者1名に使用権を許諾します。2台以上のコンピュータでの共同利用，LANその他ネットワークでの利用，公衆が使用するコンピュータへのインストールは禁止されております。「利用規約」に従ってご使用ください。

(I) Requirements in **JIS**		(II) International Standard number	(III) Requirements in International Standard		(IV) Classification and details of technical deviation between **JIS** and the International Standard by clause		(V) Justification for the technical deviation and future measures
No. and title of clause	Content		No. of clause	Content	Classification by clause	Detail of technical deviation	
4 Construction (concluded)	4.2 Materials		4.1	Materials	Addition	Add a description regarding avoidance of use of a material that stimulates skin.	Adoption of **EN 397**:2012 instead of **ISO**, whose contents are old and out of line with the current situation. Revision proposal will be planned for the occasion of **ISO** review.
	4.4 Design and finish		4.3	Shell	Identical		
	4.5 Wearing height		4.6	Wearing height	Alteration	Alter the wearing height specification to “85 mm or more”.	
	4.6 Internal vertical distance		4.4	Internal vertical distance	Alteration	Replace “not less than 25 mm and not more than 50 mm” in **ISO** with “not less than 25 mm”.	
	4.7 Horizontal distance		4.5	Horizontal clearance	Alteration	Replace “not less than 5 mm and not more than 20 mm” in **ISO** with “not less than 5 mm”.	
	4.9 Ventilation		—		Addition	Add specification of ventilation holes.	
	—		4.7	Mass specification	Deletion	Delete mass specification.	

PROTECTED BY COPYRIGHT

ご使用者　山中亮司(東洋物産工業（株）)　JSA Webdesk No.915007401 / Downloaded:2025-05-21
利用者1名に使用権を許諾します。2台以上のコンピュータでの共同利用，LANその他ネットワークでの利用，公衆が
使用するコンピュータへのインストールは禁止されております。「利用規約」に従ってご使用ください。

(I) Requirements in **JIS**		(II) International Standard number	(III) Requirements in International Standard		(IV) Classification and details of technical deviation between **JIS** and the International Standard by clause		(V) Justification for the technical deviation and future measures
No. and title of clause	Content		No. of clause	Content	Classification by clause	Detail of technical deviation	
5 Performance requirements	5.1.1 Shock absorption		5.1.1	Shock absorption	Addition	Add the requirements for helmets for protection against tumbling and falling down corresponding to the **JIS** classification of helmets, and delete the deceleration specification value (*g*).	Modifications made to comply with the Standard of Safety Helmets stipulated and notified by the Minister of Health, Labour and Welfare.
					Alteration	Replace the unit for impact force specification in **ISO**, kgf, with N. Replace the maximum force specification in **ISO**, 5.00 kN, with 4.90 kN.	
	5.1.2 Penetration resistance		5.1.2	Resistance to penetration	Addition	Add the requirements for helmets for protection against tumbling and falling down corresponding to the **JIS** classification of helmets.	
	5.2.0 General		—	—	Addition	Add marking items regarding optional requirements.	
	5.2.1 Ultra-low temperature		5.2.1	Ultra-low temperature	Addition	Add –30 °C.	
	5.2.3 Flammability		5.1.3	Flame resistance	Alteration	Alter the status of flame resistance requirement from mandatory to optional.	

PROTECTED BY COPYRIGHT

ご使用者　山中亮司(東洋物産工業（株）)　JSA Webdesk No.915007401 / Downloaded:2025-05-21
利用者1名に使用権を許諾します。2台以上のコンピュータでの共同利用，LANその他ネットワークでの利用，公衆が
使用するコンピュータへのインストールは禁止されております。「利用規約」に従ってご使用ください。

(I) Requirements in **JIS**		(II) International Standard number	(III) Requirements in International Standard		(IV) Classification and details of technical deviation between **JIS** and the International Standard by clause		(V) Justification for the technical deviation and future measures
No. and title of clause	Content		No. of clause	Content	Classification by clause	Detail of technical deviation	
5 Performance requirements (concluded)	5.2.4 Withstand voltage		5.2.2	Electrical insulation	Addition	Move the withstand voltage requirement to the main body.	
6 Tests	6.1 Sample		6.1	Samples	Alteration	Replace the number of samples in **ISO**, “7”, with “10”.	Modifications made to comply with the Standard of Safety Helmets stipulated and notified by the Minister of Health, Labour and Welfare. Deletion of the high temperature conditioning based on actual use of helmets in Japan. Revision proposal will be planned for the occasion of **ISO** review.
	6.2 Conditioning of test samples		6.2	Conditioning for testing	Alteration	Replace the sample conditioning in **ISO**, “20 °C, 65 % and 7 days”, with “at least for 24 h”. Delete the high temperature conditioning.	
	6.3 Headforms		6.3	Headforms	Alteration	Replace the headform specified in **EN 960** with that specified in the Standard of Safety Helmet stipulated by the Minister of Health, Labour and Welfare.	Replacement of **ISO** headform with the headform specified in the Standard of Safety Helmet stipulated by the Minister of Health, Labour and Welfare, which is more suitable for the average head size of people in Japan. Revision proposal will be planned for the occasion of **ISO** review.
	6.4 Measurement of wearing height, internal vertical distance and horizontal distance		6.4	Verification of clearances and wearing height	Alteration		

PROTECTED BY COPYRIGHT

ご使用者　山中亮司(東洋物産工業（株）)　JSA Webdesk No.915007401 / Downloaded:2025-05-21
利用者1名に使用権を許諾します。2台以上のコンピュータでの共同利用，LANその他ネットワークでの利用，公衆が
使用するコンピュータへのインストールは禁止されております。「利用規約」に従ってご使用ください。

(I) Requirements in **JIS**		(II) International Standard number	(III) Requirements in International Standard		(IV) Classification and details of technical deviation between **JIS** and the International Standard by clause		(V) Justification for the technical deviation and future measures
No. and title of clause	Content		No. of clause	Content	Classification by clause	Detail of technical deviation	
6 Tests (concluded)	6.5 Shock absorption test		6.5	Shock absorption test	Addition Alteration	Add the shock absorption requirements for helmets for protection against tumbling and falling down corresponding to the **JIS** classification of helmets. Alter the shock absorption value to 4.9 kN.	Modifications made to fit the actual usage of the product in Japan, and to comply with the Standard of Safety Helmets stipulated and notified by the Minister of Health, Labour and Welfare. Revision proposal will be planned for the occasion of **ISO** review.
	6.6 Penetration test		6.6	Penetration test	Addition	Add requirements for helmets for protection against tumbling and falling down.	
	6.7 Lateral rigidity test 6.8 Flammability test 6.9 Withstand voltage test		6.7 6.8 6.9	Flammability test Electrical insulation test Lateral rigidity test	Alteration	Alter the status of flammability test to optional, and add detailed instructions to flame used and test procedure. Replace with the test method that fits the domestic situations of Japan, such as electricity.	Replacement with the specification in accordance with the Personal Protective Equipment and Insulating Devices stipulated by the Minister of Health, Labour and Welfare to fit the actual usage of the product in Japan. Revision proposal will be planned for the occasion of **ISO** review.

PROTECTED BY COPYRIGHT

ご使用者　山中亮司(東洋物産工業（株）)　JSA Webdesk No.9150074 01 / Downloaded:2025-05-21
利用者1名に使用権を許諾します。2台以上のコンピュータでの共同利用，LANその他ネットワークでの利用，公衆が
使用するコンピュータへのインストールは禁止されております。「利用規約」に従ってご使用ください。

(I) Requirements in **JIS**		(II) International Standard number	(III) Requirements in International Standard		(IV) Classification and details of technical deviation between **JIS** and the International Standard by clause		(V) Justification for the technical deviation and future measures
No. and title of clause	Content		No. of clause	Content	Classification by clause	Detail of technical deviation	
7 Marking	7.1 Markings on safety helmet		7.1	Markings on the helmet	Addition	Add the marking requirements for helmets for protection against tumbling and falling down, corresponding to the **JIS** classification of helmets. Add a matter regarding durability and marking on internal components to additional information. Add marking by labelling.	Addition of marking requirements in consideration of the actual usage in Japan which have been made mandatory. Revision proposal will be planned for the occasion of **ISO** review.
	7.2 Additional information		7.2	Additional information	Addition	Method of removing the internal package for replacement.	
Annex JA (informative)	JA.2 Structure of ventilation holes		—	—	Addition	Add specification of ventilation holes.	Adoption of Guidance instead of **ISO**, whose contents are old and out of line with the current situation. Revision proposal will be planned for the occasion of **ISO** review.
—	—		Annex B	Materials and construction of helmets	Deletion	Move the content given in Annex B of **ISO** to the main body.	Alteration made for clarity of the specification content. Revision proposal will be planned for the occasion of **ISO** review.

PROTECTED BY COPYRIGHT

ご使用者　山中亮司(東洋物産工業（株）)　JSA Webdesk No.915007401 / Downloaded:2025-05-21
利用者1名に使用権を許諾します。2台以上のコンピュータでの共同利用，LANその他ネットワークでの利用，公衆が
使用するコンピュータへのインストールは禁止されております。「利用規約」に従ってご使用ください。

Overall degree of correspondence between **JIS** and International Standard (**ISO 3873**:1977): MOD
NOTE 1 Symbols in sub-columns of classification by clause in the above table indicate as follows: — Identical: Identical in technical contents. — Deletion: Deletes the specification item(s) or content(s) of International Standard. — Addition: Adds the specification item(s) or content(s) which are not included in International Standard. — Alteration: Alters the specification content(s) which are included in International Standard. NOTE 2 Symbol in column of overall degree of correspondence between **JIS** and International Standard in the above table indicates as follows: — MOD: Modifies International Standard.

PROTECTED BY COPYRIGHT

ご使用者　山中亮司(東洋物産工業（株）)　JSA Webdesk No.915007401 / Downloaded:2025-05-21
利用者1名に使用権を許諾します。2 台以上のコンピュータでの共同利用，LAN その他ネットワークでの利用，公衆が
使用するコンピュータへのインストールは禁止されております。「利用規約」に従ってご使用ください。

Errata for JIS (English edition), if any, can be downloaded in PDF format at Webdesk (purchase information page) of our website (http://www.jsa.or.jp/).

In addition, printed errata are available in our journal of *Standardization and Quality Control*, and also in *Monthly Information* that is distributed to the subscribers of JIS (English edition).

For inquiry, please contact:

Publication and Information Unit, Japanese Standards Association
Mita MT Building, 3-13-12, Mita, Minato-ku, Tokyo, 108-0073　JAPAN
TEL.　03-4231-8550　　FAX.　03-4231-8665

PROTECTED BY COPYRIGHT